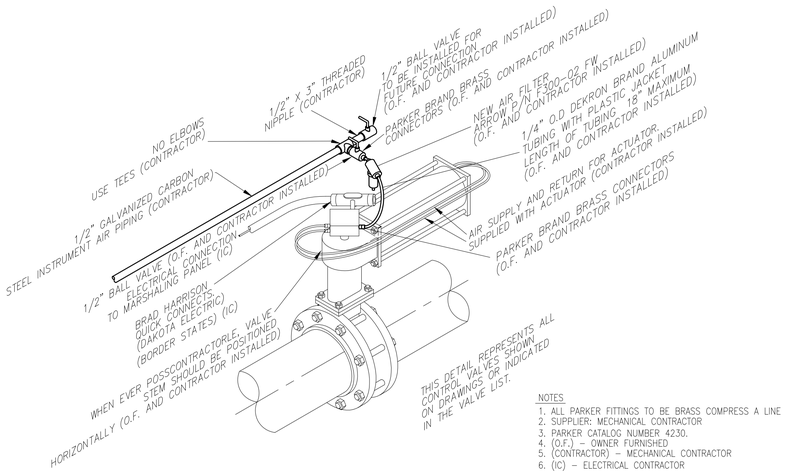

NOTES
1. ALL PARKER FITTINGS TO BE BRASS COMPRESS A LINE
2. SUPPLIER: MECHANICAL CONTRACTOR
3. PARKER CATALOG NUMBER 4230.
4. (O.F.) – OWNER FURNISHED
5. (CONTRACTOR) – MECHANICAL CONTRACTOR
6. (IC) – ELECTRICAL CONTRACTOR

1 INSTRUMENT AIR DETAIL
CONTROL VALVES
NOT TO SCALE
TYPICAL ALL CONTROL VALVES

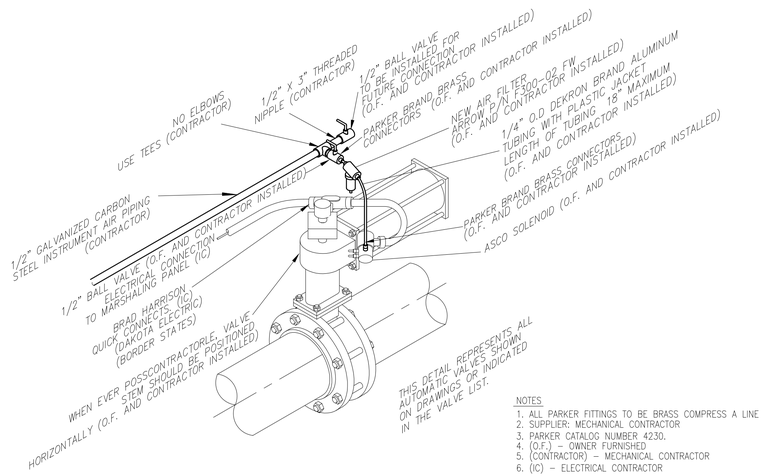

NOTES
1. ALL PARKER FITTINGS TO BE BRASS COMPRESS A LINE
2. SUPPLIER: MECHANICAL CONTRACTOR
3. PARKER CATALOG NUMBER 4230.
4. (O.F.) – OWNER FURNISHED
5. (CONTRACTOR) – MECHANICAL CONTRACTOR
6. (IC) – ELECTRICAL CONTRACTOR

2 INSTRUMENT AIR DETAIL
AUTOMATIC VALVES
NOT TO SCALE
TYPICAL ALL AUTOMATIC VALVES

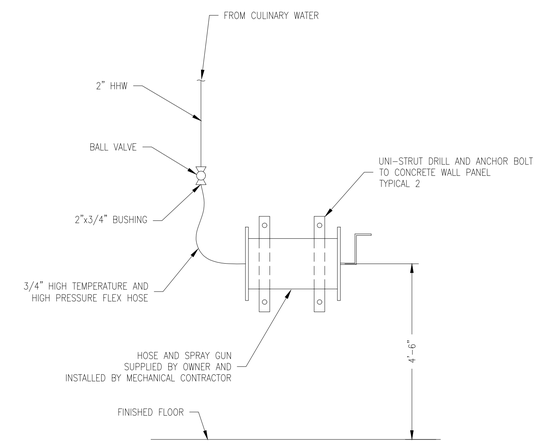

3 HOSE REEL STATION
SCALE: NTS
? REQUIRED

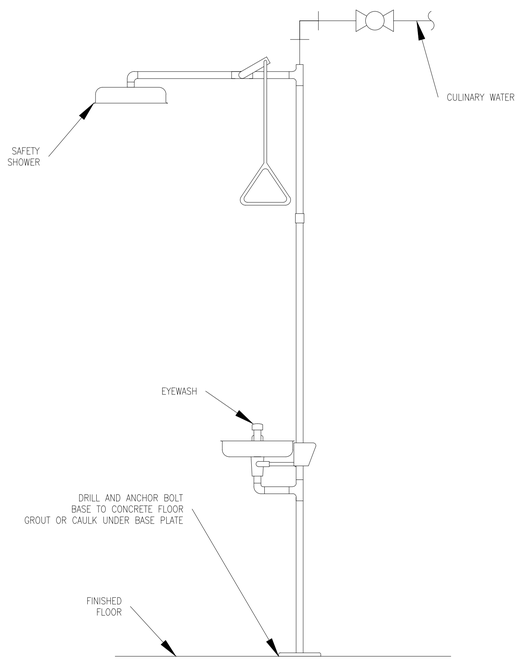

4 SAFETY SHOWER & EYE WASH STATION
SCALE: NTS
? REQUIRED

No.	Date	By	Revision	Ad. No.
A	2025.07.02	MLW	ISSUE FOR BID - ADDENDUM 1	-

PRELIMINARY
NOT FOR
CONSTRUCTION
2025.07.02

VEi Project No: E24140

One Galleria Blvd. Suite 1900
Metairie, LA 70001
Ph: 917.822.7982
www.veiglobal.com

Title:
AMALGAMATED SUGAR COMPANY
THIN JUICE EVAPORATOR PROJECT
MECHANICAL PIPING DETAILS

Amalgamated Sugar
AMALGAMATED SUGAR COMPANY
2320 ORCHARD DRIVE EAST
TWIN FALLS, IDAHO 83301

Date: 2025.05.10
Chkd By: SC
Dsgn By: MLW
Dwg Size: 24x36
Project: E24140
Dwg: M51
Revision: A